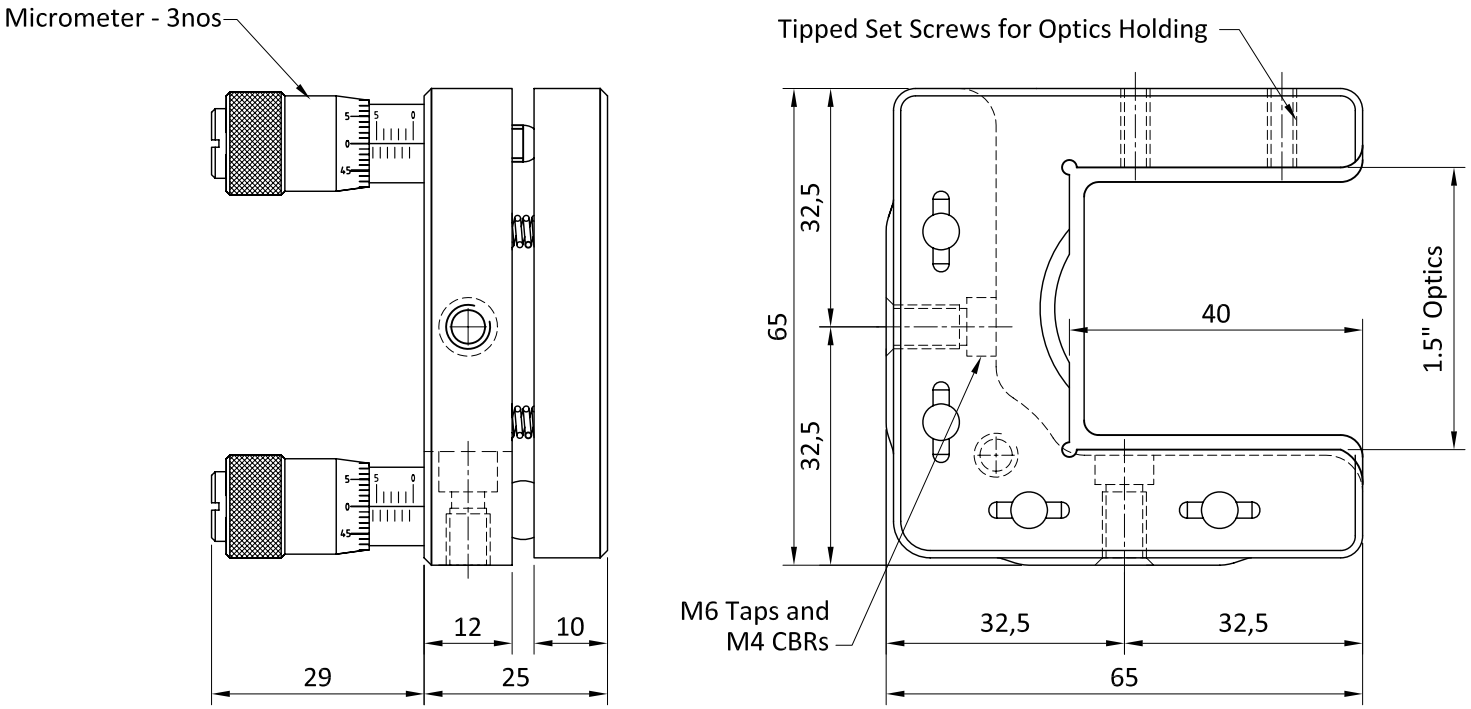

1.5’’or 38mm optic mount

Model No:KMR-Mu-T-38

"INFORMATION ONLY NOT FOR MANUFACTURING"

ALL DIMENSIONS ARE IN MM
UNLESS OTHERWISE STATED

Scale : NA

HOLMARC
OPTO-MECHATRONICS PVT. LTD

Kinematic Mount For
Rectangular Optics

THIS INFORMATION IS CONFIDENTIAL AND PROPRIETARY TO HOLMARC , ITS WORLDWIDE SUBSIDIARIES AND/OR AFFILIATES.IT MAY NOT BE DISCLOSEDTO ANYONE, OTHER THAN HOLMARC PERSONNEL, WITHOUT WRITTEN AUTHORIZATION FROM AN AUTHORIZED REPRESENTATIVE OF HOLMARC