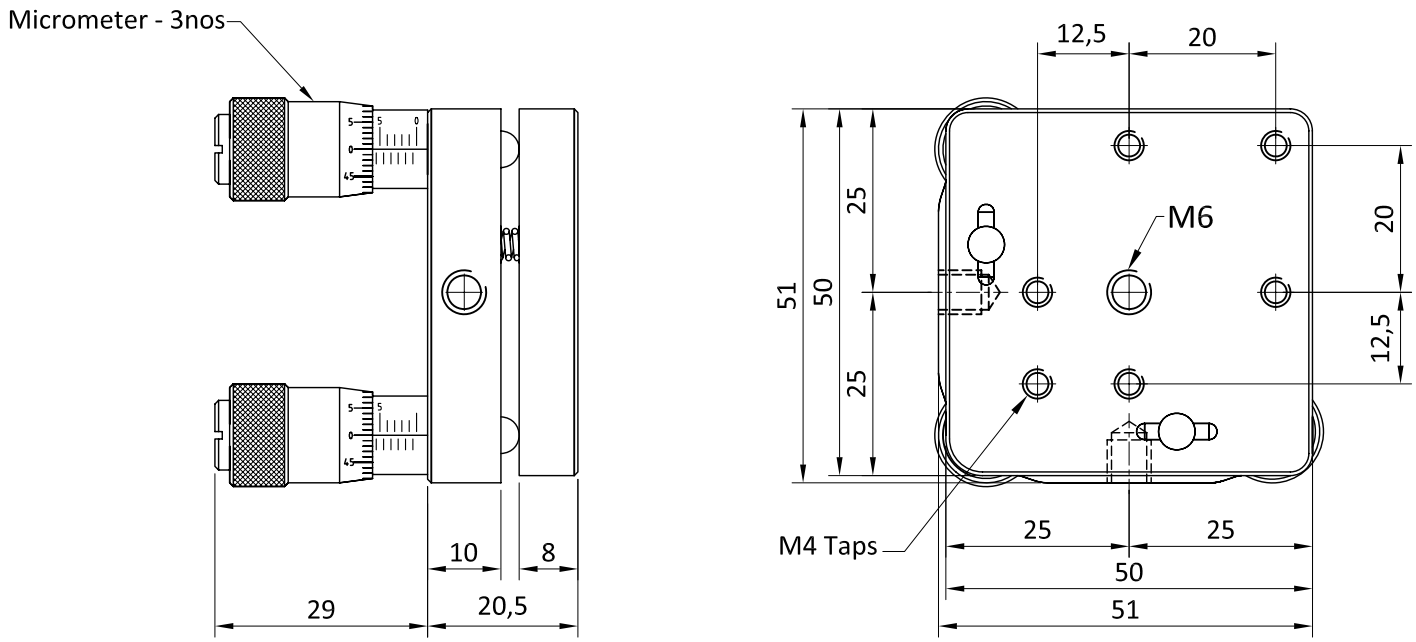

2''or 50mm optic mount

Model No:MM-Mu-T-50

"INFORMATION ONLY NOT FOR MANUFACTURING"

ALL DIMENSIONS ARE IN MM
UNLESS OTHERWISE STATED

Scale : NA

HOLMARC
OPTO-MECHATRONICS PVT. LTD

Plain Mirror Mounts

THIS INFORMATION IS CONFIDENTIAL AND PROPRIETARY TO HOLMARC , ITS WORLDWIDE SUBSIDIARIES AND/OR AFFILIATES.IT MAY NOT BE DISCLOSEDTO ANYONE, OTHER THAN HOLMARC PERSONNEL, WITHOUT WRITTEN AUTHORIZATION FROM AN AUTHORIZED REPRESENTATIVE OF HOLMARC